GRAND SEIKI



450 AS3



600 AS4 Belt



600 AS3



600 AS4 Plus

AS SERIES

CNC TAPPING CENTER

CNAS 体系认证 CNAS C007-Q

0070014Q11287R0S

CE

GRAND SEIKI MACHINERY CO., LTD.

450 AS3 / 600 AS3 / 600 AS4 Plus / 600 AS4 Belt

CNC TAPPING CENTER

GRAND SEIKI

Features

- Lightweight servo tool magazine for fast tool change
- P-grade linear guideway / C3-grade ball screw on all three axes
- Compact floor space to reduce factory space cost
- Reinforced A-frame column structure design
- Direct chip-falling design with steep angles on both sides for efficient chip evacuation
- Oil/Water separation design
- Powerful surrounding chip flushing system for efficient chip removal
- High-rigidity cast iron

600 AS4 Belt

- Table size: 650 x 400 mm
- Saddle-moving
- X/Y/Z-axis travel: 600 x 400 x 400 mm
- BT40 belt-driven spindle





- **Maximum Triple-Sliding Door Opening Size: 650 mm**





450 AS3

- Table size: 500 x 400 mm
- Saddle-moving
- X/Y/Z-axis travel: 450 x 400 x 350 mm
- BT30 direct-drive spindle

600 AS3

- Table size: 650 x 400 mm
- Saddle-moving
- X/Y/Z-axis travel: 600 x 400 x 350 mm
- BT30 direct-drive spindle

600 AS4 Plus

- Table size: 650 x 400 mm
- Saddle-moving
- X/Y/Z-axis travel: 600 x 400 x 500 mm
- BT40 direct-drive spindle



Plus



Belt

Highly Stable Structure

Column

Wide-span A-frame column design enhances spindle head support and maximizes overall structural stability

Specifications

Item		Unit	450 AS3	600 AS3	600 AS4 Plus	600 AS4 Belt
Travel	X-axis	mm	450	600		
	Y-axis	mm	400			
	Z-axis	mm	350		500	400
	Distance from spindle nose to table top	mm	110~460		200~700	200~600
	Distance from spindle center to Z-axis guideway	mm	431			476
Table	Table size	mm	500 x 400	650 x 400		
	Max. loading capacity	kgs	250			
	T-slot	–	14mm × 3 (slots)			
Axis Drive	Rapid traverse rate	m/min	48 / 48 / 48			
	Cutting feed rate	mm/min	0.001~12000			
	X/Y/Z motor power	kw	1.7 / 1.7 / 2.4 (Syntec)		1.7 / 1.7 / 3.9 (Syntec)	
			1.5 / 1.5 / 1.5 (Mitsubishi)		1.5 / 1.5 / 3.0 (Mitsubishi)	
			2.5 / 2.5 / 2.7 (Fanuc)		1.8 / 1.8 / 3.0 (Fanuc)	
Spindle	Spindle diameter	mm	100		126	116
	Max. spindle speed	rpm	12000			8000
	Spindle taper	–	BT30 x 45°		BT40 x 45°	
	Spindle motor power	kw	7.5 / 5.5 (Syntec)		11 / 7.3 (Syntec)	
			5.5 / 3.7 (Mitsubishi)		7.5 / 5.5 (Mitsubishi)	
			5.5 / 3.7 (Fanuc)		7.5 / 5.5 (Fanuc)	
ATC Unit	Tool storage capacity	T	16	21	24	12
	Max. tool diameter	mm	100		80	
	Max. tool length	mm	200		300	
	Max. tool weight	kgs	3		5	
	Tool changing time (T-T)	sec.	1.3 (T~T)		2.7 (T~T)	2.8 (T~T)
General	Machine height	mm	2522		2840	2935
	Floor space (Width × Depth)	mm	1200 x 2283	1737 x 2163	1918 x 2163	1737 x 2163
	Machine weight	kgs	2609	2750	3030	2857

■ Specifications are subject to change without prior notice. The actual machine shall prevail.

Machining Capacity

450 AS3 / 600 AS3 with Mitsubishi Controller (Syntec Controller)

Material \ Machining	Drilling		Tapping		Milling	
	Max.	Min.	Max.	Min.	MRR	Width×Depth×Feed
Aluminum Alloy(A6061)	26 (22)	0.3	M18 x 2.5	M1 x 0.25	378 cc/min	63 x 2.0 x 3000
Medium Carbon Steel(S45C)	22	1.65	M16 x 2.0 (M20 x 1.5)	M2 x 0.40	95 cc/min	63 x 1.5 x 1000
Stainless Steel (SUS430)	18.5	0.92	M12 x 1.75	M1 x 0.25	95 (119) cc/min	63 x 1.5 x 1000 (63 x 0.7 x 2700)
Cast Iron(FC-25)	22	–	M20 x 1.5	–	170 cc/min	63 x 1.0 x 2700

600 AS4 Plus / 600 AS4 Belt with Mitsubishi Controller

Material \ Machining	Drilling		Tapping		Milling	
	Max.	Min.	Max.	Min.	MRR	Width×Depth×Feed
Aluminum Alloy(A6061)	31	1.65	M22 x 2.5	M2 x 0.4	402 cc/min	67 x 4 x 1500
Medium Carbon Steel(S45C)	26	0.92	M22 x 2.5	M2 x 0.4	119 cc/min	63 x 2.5 x 758
Stainless Steel (SUS430)	26	1.65	M16 x 2	M2 x 0.4	96 cc/min	63 x 2 x 758
Cast Iron(FC-25)	31	–	M24 x 3	–	176 cc/min	63 x 3.5 x 800

Machine Configuration

Spindle

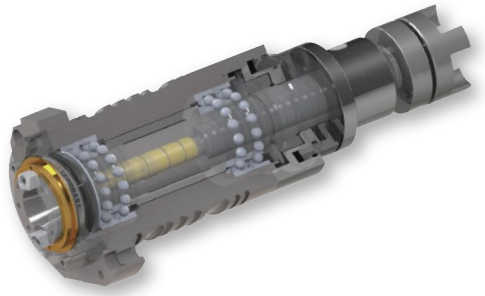

- BT30 direct-drive spindle
- Spindle speed: 12,000 rpm (standard)
  20,000 rpm (optional: Fanuc)
  24,000 rpm (optional: Mitsubishi)
  30,000 rpm (optional, built-in motor spindle)
- High-precision angular contact ball bearings with wide-span arrangement for high-speed operation and high rigidity
- Oil cooling temperature control system
- Double protection with labyrinth seal and air curtain system



- BT40 belt-driven spindle (8,000 rpm)
- High-precision belt pulley for high torque transmission
- High-precision, high-rigidity bearings
- Forward/reverse labyrinth seal design



- BT40 direct-drive spindle (12000rpm)
- Minimize transmission power loss to maximize spindle motor efficiency
- Oil-cooled temperature control system
- High-tension adjustable four-petal gripper

Tool Magazine

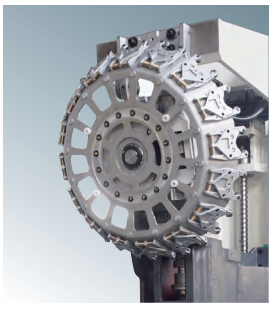

- Servo-driven tool selection with high-response servo tool magazine



- Cam indexing mechanism ensures smooth rotation and precise positioning
- Suitable for high-speed tool changes and applications requiring a larger quantity of bigger tools

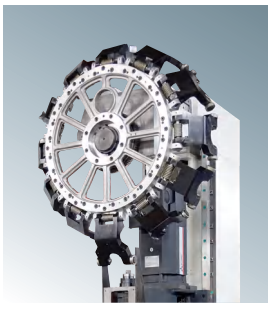

- Each tool gripper can be individually removed for easy maintenance, cleaning, and service

Fourth Axis (Opt.)



- Direct-Drive Indexing Table (DDM)

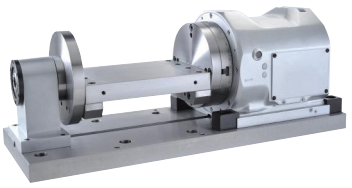

High-Performance Control Systems



Mitsubishi System



Fanuc System



Syntec System

- High-speed, high-precision control system with error compensation
- Multiple interfaces including USB and network ports

Side Automatic Door (Opt.)



Standard & Optional Equipment

GRAND SEIKI

O: Standard Δ: Option X: None

Item \ Model		450 AS3	600 AS3	600 AS4 Plus	600 AS4 Belt
Controller	Mitsubishi	Δ	Δ	O	O
	Fanuc	Δ	Δ	Δ	Δ
	Syntec	O	O	Δ	Δ
Spindle	8000rpm (Belt-Driven Spindle)	X	X	X	O
	12000rpm (Direct-Drive Spindle)	O	O	O	X
	20000rpm (Direct-Drive Spindle)	Δ	Δ	X	X
	24000rpm (Direct-Drive Spindle)	Δ	Δ	X	X
	30000rpm (Built-in Motor Spindle)	Δ	Δ	X	X
	Spindle Oil Cooling & Temperature Control System	O	O	O	Δ
	Spindle Air Blowing Device	O	O	O	O
	Coolant Through Spindle	Δ	Δ	Δ	X
	Spindle Oil-Mist Lubrication System	Δ	Δ	Δ	Δ
	BBT Dual-Contact Spindle	Δ	Δ	Δ	Δ
Tool Magazine	16T	O	X	X	X
	21T	X	O	X	X
	24T	X	X	O	X
	12T	X	X	X	O
	Tool Length Measurement	Δ	Δ	Δ	Δ
	Tool Breakage Detection System	Δ	Δ	Δ	Δ
Mechanical System	Automatic Lubrication System	O	O	O	O
	Surrounding Automatic Chip Flushing System	O	O	O	O
	Full Enclosed Heat-Isolated Electrical Cabinet	O	O	O	O
	Transformer	O	O	O	O
	LED Work Light	O	O	O	O
	Three-Color Tower Light	O	O	O	O
	Air Gun & Water Gun	O	O	O	O
	Fourth Axis	Δ	Δ	Δ	Δ
	M Codes	Δ	Δ	Δ	Δ
	Air-Conditioning System for Electrical Cabinet	Δ	Δ	Δ	Δ
	Workpiece Air Blowing Device	Δ	Δ	Δ	Δ
	Full Enclosed Enclosure	Δ	Δ	Δ	Δ
	Oil Mist Collector	Δ	Δ	Δ	Δ
	Front Automatic Door	Δ	Δ	Δ	Δ
	Side Automatic Door	Δ	Δ	Δ	Δ
	Safety Door Lock	Δ	Δ	Δ	Δ
	Chip Conveyor	Δ	Δ	Δ	Δ
	Oil/Water Separator	Δ	Δ	Δ	Δ

GRAND SEIKI

Nothing But The Best

Driven by Quality / Strengthened by Expertise
Powered by Service / Inspired by Innovation





MILESTONES

- 2003-Established as a Foreign-Invested Enterprise
- 2008-Factory Expansion Completed
- 2013-Organizational Restructuring Completed
- 2014-ISO 9001 Quality Management System Certification Obtained
- 2018-Recognized as a National High-Tech Enterprise





Our complete range of tapping centers and machining centers is engineered for high-speed machining, rapid tool changes, and versatile manufacturing applications. Widely used in automotive, 3C electronics, watchmaking, medical, new energy, and precision component industries, our machines deliver outstanding productivity, accuracy, and reliability. In addition, we provide comprehensive machining solutions and full-process manufacturing support tailored to customer requirements.

Nothing But The Best



www.grand-seiki.com

GRAND SEIKI®

GRAND SEIKI MACHINERY CO., LTD.

No.168, Mingyue Road, Cao'e Subdistrict
Shangyu District, Shaoxing City
Zhejiang 312300, China
Tel: +86-575-8213 8350
Mobile: +86-137-57570377
E-mail: grandseiki@vip.163.com

GRAND SEIKI

AC SERIES

CNC TAPPING CENTER

(Travelling Column)

Nothing But The Best

1000 AC$_3$

750 AC$_3$



700 AC$_3$ S

CNAS 体系认证 CNAS C007-Q

0070014Q11287R0S

CE

GRAND SEIKI MACHINERY CO., LTD.

GRAND SEIKI

AC SERIES

750 AC3　1000 AC3　700 AC3 S

CNC TAPPING CENTER

(Travelling Column)



750 AC3

- Table size: 900 x 400 mm
- Column-moving
- X/Y/Z-axis travel: 750 x 400 x 300 mm
- BT30 direct-drive spindle



1000 AC3

- Table size: 1100 x 400 mm
- Column-moving
- X/Y/Z-axis travel: 1000 x 400 x 300 mm
- BT30 direct-drive spindle



Reinforced structure for excellent stability



The machining area is completely isolated from the three-axis drive area, effectively preventing chips and coolant generated during machining from affecting accuracy and service life, while enhancing overall machine quality and performance.



The X-axis linear guideways feature a stepped height design with a wide-span balanced support structure, enhancing structural rigidity and overall stability.

Features

- The three-axis drive area is completely separated from the machining area for easy maintenance and cleaning
- Dual worktable height options available
- Optional wall-mounted 4th axis helps improving chip evacuation without affecting travel
- Built-in coolant tank with front chip collection tray
- Lightweight servo tool magazine for fast tool changes
- Direct chip drop design prevents chip accumulation
- P-grade linear guideways and C3-grade ball screws for all three axes
- Z-axis equipped with roller linear guideways
- High-rigidity cast iron

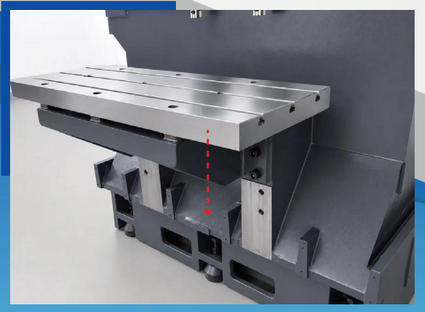

Adjustable Table Height

Adjustable table height to meet various workpiece and fixture requirements



Space-Saving Design and Easy Maintenance

The transformer and oil cooler are integrated within the machine footprint for easy maintenance, space saving, and reduced factory costs.

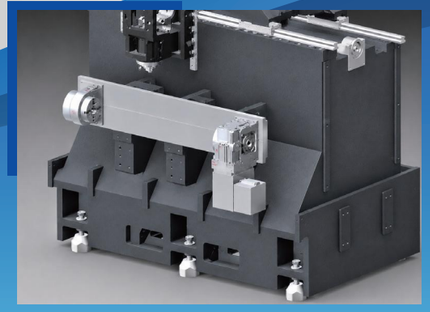

Side-Mounted 4th Axis

- Effectively eliminates the impact on machining travel after installing the 4th axis.
- Less chip accumulation, making workpiece replacement easier.
- Reduces clamping time and improves machining efficiency.

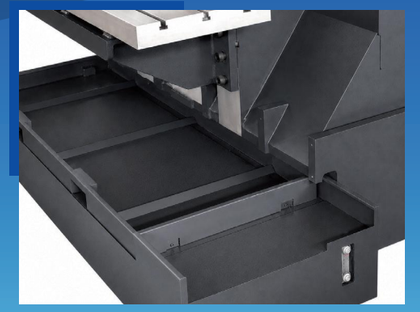

Direct Chip Drop Design

- The chips are flushed by coolant and fall directly into the chip collection tray, forming a direct chip drop evacuation system.
- This design prevents chip accumulation during machining, improves the working environment, and extends machine service life.



Features

- Dual-station Rotary Table for high machining efficiency and reduced labor cost
- Three-axes drive area completely separated from the machining area for easy maintenance, servicing and cleaning
- Lightweight servo tool magazine for fast tool change
- Direct chip drop design prevents chip accumulation
- P-grade linear guideways and C3-grade ball screws on all three axes
- Z-axis roller linear Guideway
- High-rigidity cast iron

700 AC3 S

- Rotary Table
- Dual-Station Rotary Table Size: 700×400 (mm)×2pcs
- Column-Moving
- X/Y/Z-axis travel: 700×400×300 (mm)
- BT30 Direct-Drive Spindle

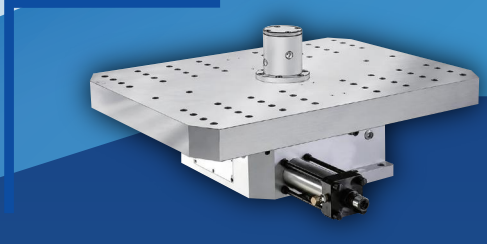

High-Rigidity Structure



Dual-Station Rotary Table

- Enables simultaneous machining and loading/unloading to maximize productivity
- Reduces idle time and increases machine utilization
- Shortens cycle time for high-efficiency mass production
- Enhances operator safety by separating machining and loading/unloading areas

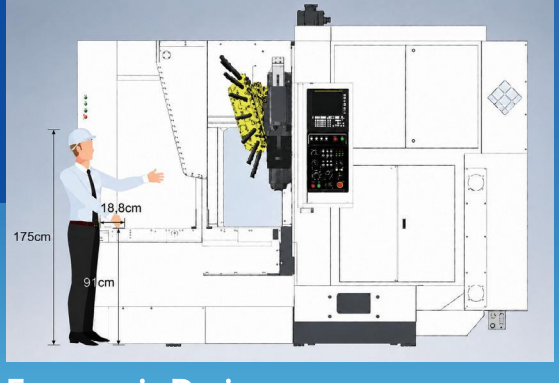

Ergonomic Design

- Designed in accordance with ergonomic principles. The table height is approximately **91cm** from the floor and about **18.8 cm** distance from the operator to the front edge of the table, making loading and unloading easier and more convenient.
- It improves working efficiency and helps reduce occupational injuries.

Standard Equipment

- Fanuc Controller
- 12,000 RPM (Direct-Drive Spindle)
- Spindle Oil Cooling & Temperature Control System
- Spindle Air Blowing Device
- 21T Servo Tool Magazine
- Automatic Lubrication System
- Full Enclosed Heat-Isolated Electrical Cabinet
- Transformer
- LED Work Light
- Three-Color Tower Light
- Air Gun & Water Gun
- Tool Box
- Tool Cooling System

Optional Equipment

- Mitsubishi Controller
- 20,000 RPM (Fanuc) / 24,000 RPM (Mitsubish) (Direct-Drive Spindle)
- Coolant Through Spindle
- Spindle Oil-Mist Lubrication System
- BBT Dual-Contact Spindle
- Tool Length Measurement
- Tool Breakage Detection System
- Fourth Axis
- M Codes
- Air-Conditioning System for Electrical Cabinet
- Workpiece Air Blowing Device
- Full Enclosed Enclosure
- Oil Mist Collector
- Automatic Door
- Safety Door Lock
- Chip Conveyor
- Oil/Water Separator

GRAND SEIKI

Specifications

Item \ Model		Unit	750 AC3	1000 AC3	700 AC3 S
Travel	X-axis	mm	750	1000	700
	Y-axis	mm	400		
	Z-axis	mm	300		
	Distance from spindle nose to table top	mm	180~480 (or 330~630)		260~560
	Distance from spindle center to Z-axis guideway	mm	190		
Table	Table size	mm	900 x 400	1100 x 400	700 x 400 (2 pcs)
	Max. loading capacity	kgs	350		700
	T-slot	–	14mm × 3 (slots)		18mm × 3 (slots)
Axis Drive	Rapid traverse rate	m/min	48 / 48 / 48		
	Cutting feed rate	mm/min	0.001~12000		
	X/Y/Z motor power	kw	3.0 / 3.0 / 3.0		
Spindle (Direct Drive)	Spindle diameter	mm	100		
	Max. spindle speed	rpm	12000		
	Spindle taper	–	BT30 x 45°		
	Spindle motor power	kw	7.5 / 5.5		
ATC Unit (Servo-Driven)	Tool storage capacity	T	21		
	Max. tool diameter	mm	100		
	Max. tool length	mm	200		
	Max. tool weight	kgs	3		
	Tool changing time (T-T)	sec.	1.5 (T~T)		
General	Machine height	mm	2800		
	Floor space (Width × Depth)	mm	1885 x 2828	2140 x 2828	2016 x 3200
	Machine weight	kgs	4500	4750	5600

■ Specifications are subject to change without prior notice. The actual machine shall prevail.

Machining Capacity

750 AC3 / 1000 AC3 / 700 AC3 S (with Fanuc Controller)

Material \ Machining	Drilling		Tapping		Milling	
	Max.	Min.	Max.	Min.	MRR	Width×Depth×Feed
Aluminum Alloy(A6061)	31	0.3	M20 x 2.5	M1 x 0.25	340 cc/min	63 x 1.8 x 3000
Medium Carbon Steel(S45C)	24	1.65	M18 x 2.5	M2 x 0.40	139 cc/min	63 x 1.0 x 2200
Stainless Steel (SUS430)	20	0.92	M14 x 2.0	M1 x 0.25	101 cc/min	63 x 0.8 x 2000
Cast Iron(FC-25)	26	–	M20 x 2.5	–	113 cc/min	63 x 1.0 x 1800

Driven by Quality
Strengthened by Expertise
Powered by Service
Inspired by Innovation





Our complete range of tapping centers and machining centers is engineered for high-speed machining, rapid tool changes, and versatile manufacturing applications. Widely used in automotive, 3C electronics, watchmaking, medical, new energy, and precision component industries, our machines deliver outstanding productivity, accuracy, and reliability. In addition, we provide comprehensive machining solutions and full-process manufacturing support tailored to customer requirements.

GRAND SEIKI®

GRAND SEIKI MACHINERY CO., LTD.
No.168, Mingyue Road, Cao'e Subdistrict
Shangyu District, Shaoxing City
Zhejiang 312300, China
Tel: +86-575-8213 8350
Mobile: +86-137-57570377
E-mail: grandseiki@vip.163.com
www.grand-seiki.com

202607-AC-C-1000

GRAND SEIKI

AC SERIES

Nothing But The Best

CNC MACHINING CENTER

(Travelling Column)





950 AC4 Plus

CNAS 体系认证 CNAS C007-Q

0070014Q11287R0S

CE

GRAND SEIKI MACHINERY CO., LTD.

GRAND SEIKI

Nothing But The Best

AC SERIES

CNC MACHINING CENTER
(Travelling Column)

950 AC4 Plus

Driven by Quality / Strengthened by Expertise
Powered by Service / Inspired by Innovation

Features

- Three-axes drive area completely separated from the machining area for easy maintenance, service, and cleaning
- Adjustable worktable height to meet different machining requirements
- Wall-mounted 4th-axis, without affecting axis travel and allowing smooth chip evacuation
- Embedded coolant tank with front chip collection tray
- Direct chip drop design prevents chip accumulation
- P-grade linear guideways and C3-grade ball screws on all three axes
- Y and Z axes equipped with roller linear guideways for high precision and high rigidity
- High-rigidity cast iron material
- Arm-type tool magazine, suitable for applications requiring more and larger tools





- Table size: 1050 x 550 mm
- Column-Moving
- X/Y/Z-axis travel: 950 x 550 x 400 mm
- BT40 direct-drive spindle



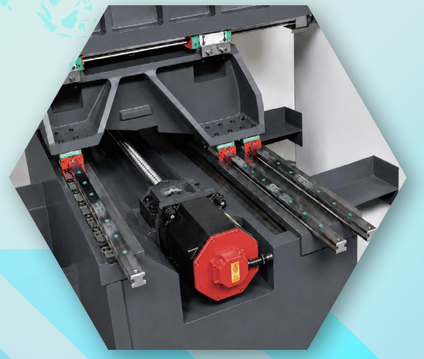

- Three X-axis linear guideways provide a larger contact area for higher load capacity, greater stability, and superior machining accuracy.
- Wide-span offset guideway arrangement maximizes structural rigidity and machine stability.
- Front-high, rear-low guideway configuration reinforces column support at full travel for enhanced rigidity and cutting performance.



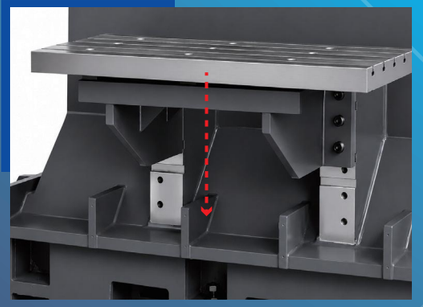

Adjustable worktable
Adjustable according to workpiece and fixture requirements.



Space-saving design for easy maintenance
Transformer and oil cooler are integrated within the machine footprint, reducing floor space and factory cost.

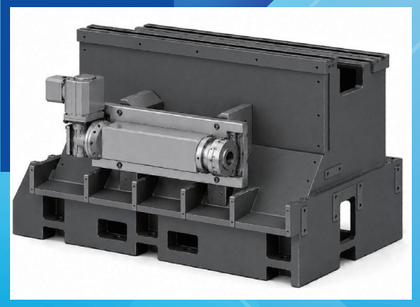

Side-mounted 4th axis
- Effectively avoids reduction of the machining range after installing the 4th axis.
- Chip accumulation is minimized, allowing easier workpiece replacement.
- Reduces setup time and improves machining efficiency.



Direct chip drop design
- Cutting chips are flushed by coolant directly into the chip collection tray, forming a direct chip drop system.
- This design prevents chip accumulation, improves the working environment, and extends machine service life.

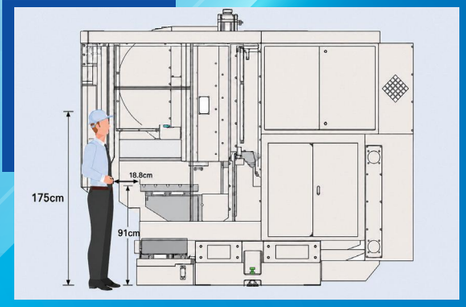

Ergonomic Design
- Designed in accordance with ergonomic principles. The table height is approximately 91cm from the floor and about 18.8 cm distance from the operator to the front edge of the table, making loading and unloading easier and more convenient.
- It improves working efficiency and helps reduce occupational injuries.

Specifications

Item	Model	Unit	950 AC4 Plus
Travel	X-axis	mm	950
	Y-axis	mm	550
	Z-axis	mm	400
	Distance from spindle nose to table top	mm	115~515 (or 265~665 or 340~740)
	Distance from spindle center to Z-axis guideway	mm	218
Table	Table size	mm	1050 x 550
	Max. loading capacity	kgs	500
	T-slot	–	14mm × 5 (slots)
Axis Drive	Rapid traverse rate	m/min	48 / 48 / 48
	Cutting feed rate	mm/min	0.001~12000
	X/Y/Z motor power	kw	3.0 / 3.0 / 3.0
Spindle (Direct Drive)	Spindle diameter	mm	140
	Max. spindle speed	rpm	12000
	Spindle taper	–	BT40 x 45°
	Spindle motor power	kw	11 / 7.5
ATC Unit	Tool storage capacity	T	24
	Max. tool diameter	mm	80
	Max. tool length	mm	300
	Max. tool weight	kgs	8
	Tool changing time (T-T)	sec.	5.1 (T~T)
General	Machine height	mm	2800
	Floor space (Width × Depth)	mm	2525 x 3001
	Machine weight	kgs	5850

- Specifications are subject to change without prior notice. The actual machine shall prevail.

Standard Equipment

- Fanuc Controller
- 12,000 RPM (Direct-Drive Spindle)
- Spindle Oil Cooling & Temperature Control System
- Spindle Air Blowing Device
- 24T Automatic Tool Changer
- Automatic Lubrication System
- Full Enclosed Heat-Isolated Electrical Cabinet
- Transformer
- LED Work Light
- Three-Color Tower Light
- Air Gun & Water Gun
- Tool Box
- Tool Cooling System

Optional Equipment

- Mitsubishi Controller
- Coolant Through Spindle
- Spindle Oil-Mist Lubrication System
- BBT Dual-Contact Spindle
- Tool Length Measurement
- Tool Breakage Detection System
- Fourth Axis
- M Codes
- Safety Light Curtain
- Linear Scales on Three Axes
- 30T Arm-Type Tool Magazine
- Air-Conditioning System for Electrical Cabinet
- Workpiece Air Blowing Device
- Full Enclosed Enclosure
- Oil Mist Collector
- Automatic Door
- Safety Door Lock
- Chip Conveyor
- Oil/Water Separator



Machining Capacity (950 AC4 Plus with Fanuc Controller)

Machining / Material	Drilling		Tapping		Milling	
	Max.	Min.	Max.	Min.	MRR	Width×Depth×Feed
Aluminum Alloy(A6061)	31	1.65	M24 x 3.0	M2 x 0.4	473 cc/min	63 x 5.0 x 1500
Medium Carbon Steel(S45C)	26	1.65	M22 x 2.5	M2 x 0.4	158 cc/min	63 x 2.5 x 1000
Stainless Steel (SUS430)	26	1.65	M16 x 2.0	M2 x 0.4	126 cc/min	63 x 2.0 x 1000
Cast Iron(FC-25)	31	–	M24 x 3.0	–	202 cc/min	63 x 4.0 x 800

GRAND SEIKI®

GRAND SEIKI MACHINERY CO., LTD.

No.168, Mingyue Road, Cao'e Subdistrict
Shangyu District, Shaoxing City
Zhejiang 312300, China
Tel: +86-575-8213 8350
Mobile: +86 137 5757 0377
E-mail: grandseiki@vip.163.com

www.grand-seiki.com

202607-AC-C-1000

GRAND SEIKI

Nothing But The Best







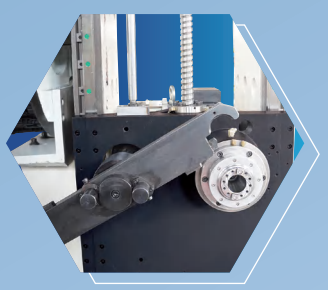

HS 500

CNC HORIZONTAL MACHINING CENTER

CNAS 体系认证 CNAS C007-Q

0070014Q11287R0S

CE

GRAND SEIKI MACHINERY CO., LTD.

GRAND SEIKI

HS 500

CNC HORIZONTAL MACHINING CENTER



- Table size: 500 x 500 mm
- Saddle-Moving
- X/Y/Z-axis travel: 650 x 500 x 500 mm
- BT40 direct-drive spindle





- Asymmetrical column support structure integrated with the base for higher rigidity
- Tool magazine side vertically supported by the base, with extended support on the opposite side
- Symmetrical design of the spindle and tool magazine cam box improves Y-axis stability and extends ball screw life



- Machine Dimensions with Chip Conveyor (Opt.): 3155x2884x2891(mm)



- 1° rotary table
- High-precision, high-rigidity rotary table

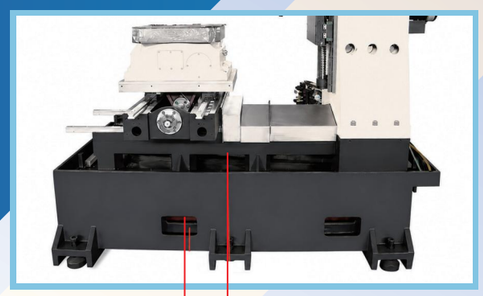

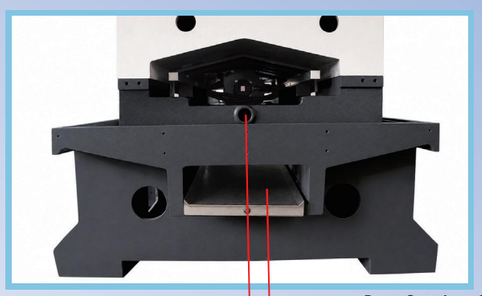

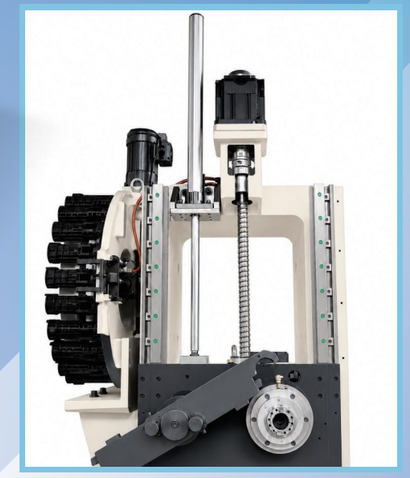

- Integrated spindle head and cam box design
- Center-positioned ball screw design extends service life
- Auxiliary nitrogen counterbalance cylinder balances spindle head load
- Integrated spindle and cam box structure shortens tool arm rotation radius for faster tool changes

Features

- Built-in oil cooler, hydraulic unit, and transformer for space-saving
- Tool magazine with automatic door and full enclosure to prevent chips from entering the magazine.
- Surround flushing system with stainless steel chip chute for smooth chip evacuation
- Fully enclosed sheet metal guarding
- Rotary control panel for convenient operation
- Hydraulic clamping indexing table for heavy-duty cutting
- Hirth coupling indexing table for high positioning accuracy

Specifications

Item	Model	Unit	HS 500
Travel	X-axis	mm	650
	Y-axis	mm	500
	Z-axis	mm	500
	Distance from spindle nose to table top	mm	137~637
Table	Table size	mm	500 x 500
	Max. loading capacity	kgs	500
	Minimum indexing increment	deg	1
	Positioning accuracy	arc-sec	10
	Repeatability accuracy	arc-sec	2
	Drive method	–	Servo Motor
	T-slot	mm	18h7
Axis Drive	Rapid traverse rate	m/min	48 / 36 / 48
	Cutting feed rate	mm/min	0.001~12000
	X/Y/Z motor power	kw	3.0 / 3.0 / 3.0
Spindle (Direct Drive)	Spindle diameter	mm	126
	Max. spindle speed	rpm	12000
	Spindle taper	–	BT40 x 45°
	Spindle motor power	kw	7.5 / 5.5
ATC Unit	Tool storage capacity	T	24
	Max. tool diameter	mm	80
	Max. tool length	mm	300
	Max. tool weight	kgs	8
	Tool change time (T-T)	sec.	4.6 (T~T)
General	Machine height	mm	2891
	Floor space (Width × Depth)	mm	2180 x 2884
	Machine weight	kgs	7250

- Specifications are subject to change without prior notice. The actual machine shall prevail.

Standard Equipment

- Mitsubishi Controller
- 12,000 RPM (Direct-Drive Spindle)
- Spindle Oil Cooling & Temperature Control System
- Spindle Air Blowing Device
- 24T Automatic Tool Changer
- Tool Cooling System
- Automatic Lubrication System
- Surrounding Automatic Chip Flushing System
- Full Enclosed Heat-Isolated Electrical Cabinet
- Transformer
- LED Work Light
- Three-Color Tower Light
- Air Gun & Water Gun
- Tool Box
- Full Enclosed Enclosure

Optional Equipment

- Fanuc Controller
- Coolant Through Spindle
- BBT Dual-Contact Spindle
- 30T Arm-Type Tool Magazine
- Tool Length Measurement
- Tool Breakage Detection System
- M Codes
- Air-Conditioning System for Electrical Cabinet
- Workpiece Air Blowing Device
- Oil Mist Collector
- Automatic Door
- Chip Conveyor
- Oil/Water Separator
- Safety Light Curtain
- Linear Scales on Three Axes
- Safety Door Lock

Machining Capacity (HS 500 with Mitsubishi Controller)

Material \ Machining	Drilling		Tapping		Milling	
	Max.	Min.	Max.	Min.	MRR	Width×Depth×Feed
Aluminum Alloy(A6061)	31	1.65	M24 x 3.0	M2 x 0.4	425 cc/min	63 x 4.5 x 1500
Medium Carbon Steel(S45C)	26	1.65	M22 x 2.5	M2 x 0.4	126 cc/min	63 x 2.0 x 1000
Stainless Steel (SUS430)	26	1.65	M16 x 2.0	M2 x 0.4	113 cc/min	63 x 1.8 x 1000
Cast Iron(FC-25)	31	–	M24 x 3.0	–	202 cc/min	63 x 4.0 x 800

GRAND SEIKI®

GRAND SEIKI MACHINERY CO., LTD.

No.168, Mingyue Road, Cao'e Subdistrict
Shangyu District, Shaoxing City
Zhejiang 312300, China
Tel: +86-575-8213 8350
Mobile: +86-137-57570377
E-mail: grandseiki@vip.163.com

www.grand-seiki.com